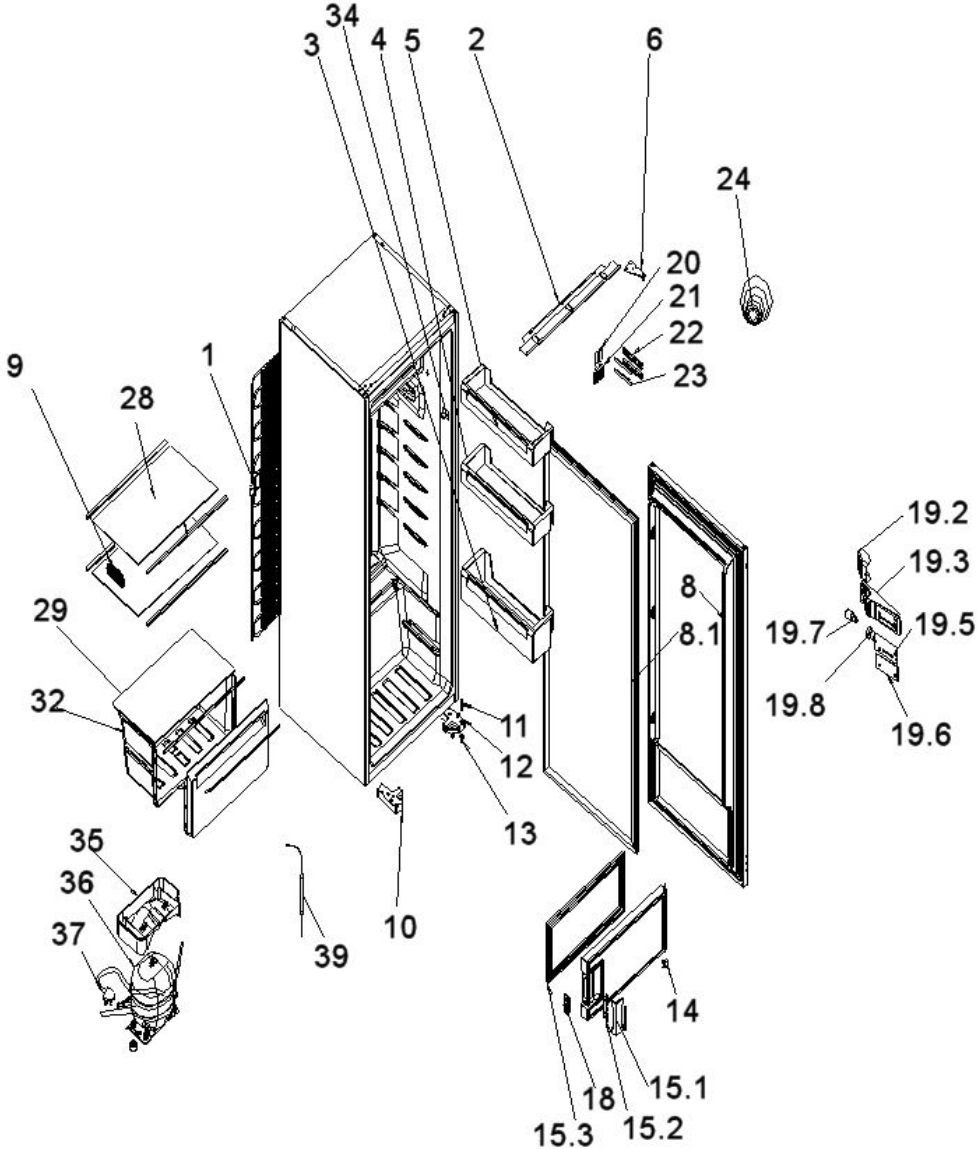
34
3
4
5
2
6
24
20
21
22
23
9
1
28
19.2
19.3
8
29
19.7
19.5
8.1
32
19.8
19.6
11
12
13
35
36
37
10
39
14
18
15.1
15.3
15.2